FLÛTE, FLÛTE MAGNUM

Franco Raggi, 1999

A glass cone holds the chromed aluminum reflector, supported by three slender metal rods. Equilibrium and lightness for this family of lamps available in floor and wall versions, for indirect light emission, and in a hanging version, for direct focused light.

RELATED PRODUCTS

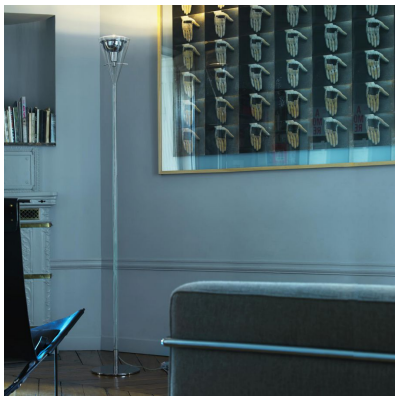

FLÛTE, FLÛTE MAGNUM

Floor Lamp

FLÛTE

Wall Lamp

TECHNICAL SHEET

Suspension lamp. Transparent borosilicate glass diffuser. Reflector in polished chromed aluminium. Transparent power cable. Glass cone houses a reflector held by three chromed arms. The light reflects around the cone thus giving constant downward emission.

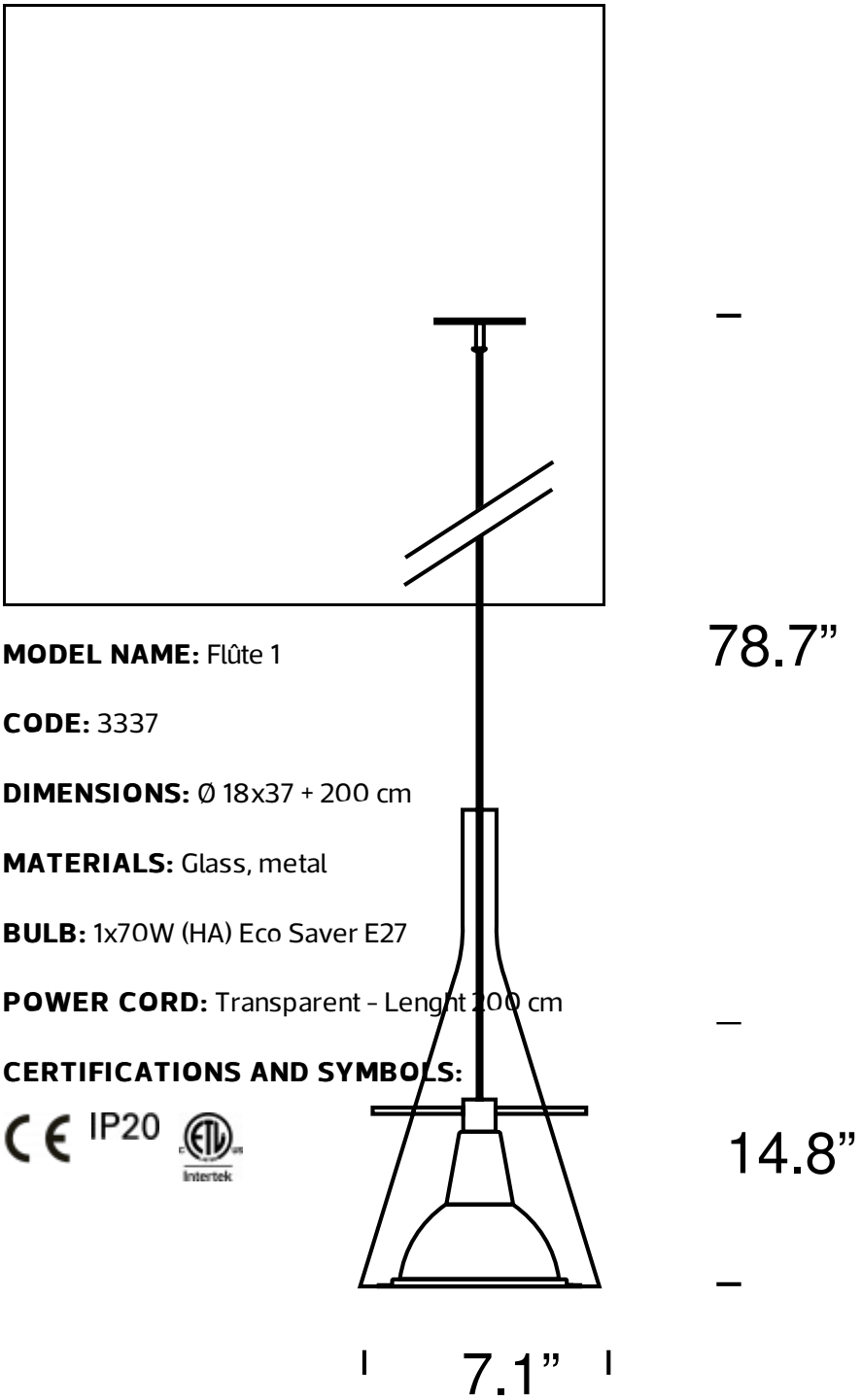

MODEL NAME: Flûte 1

CODE: 3337

DIMENSIONS: Ø 18x37 + 200 cm

MATERIALS: Glass, metal

BULB: 1x70W (HA) Eco Saver E27

POWER CORD: Transparent - Lenght 200 cm

CERTIFICATIONS AND SYMBOLS:

CE IP20 ETL Intertek

MODEL NAME: Flûte 1 Led

CODE: 4342

DIMENSIONS: Ø 18x37 + 200 cm

MATERIALS: Glass, metal

BULB: 10W Led Line Voltage (2700 K, CRI 80, 1250 Lm)

POWER CORD: Transparent - Lenght 200 cm

CERTIFICATIONS AND SYMBOLS:

CE IP20

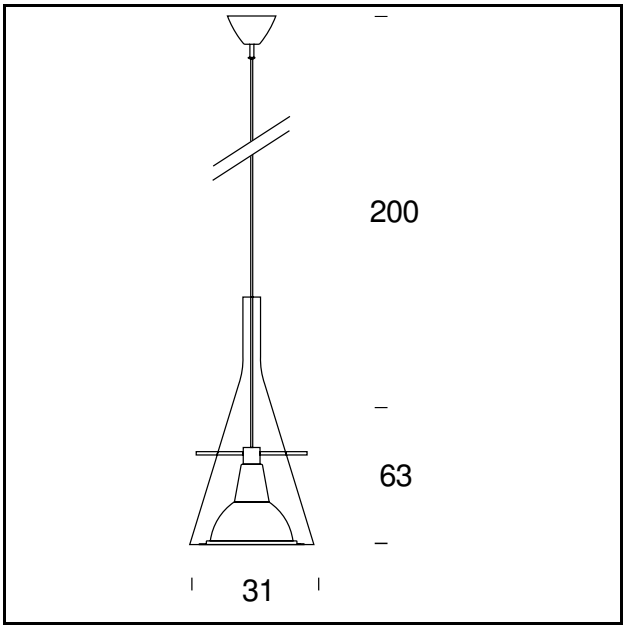

MODEL NAME: Flûte Magnum

CODE: 3337/1

DIMENSIONS: Ø 31x63 + 200 cm

MATERIALS: Glass, metal

BULB: 1x230W (HA) Eco Saver R7s/115

POWER CORD: Transparent - Lenght 200 cm

CERTIFICATIONS AND SYMBOLS:

CE IP20

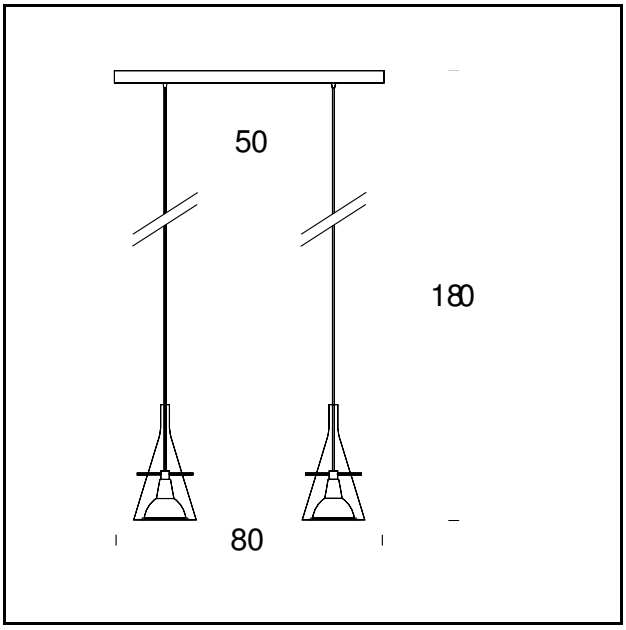

MODEL NAME: Flûte 2

CODE: 3337/2

DIMENSIONS: Ø 18 - 80 + 180 cm

MATERIALS: Glass, metal

BULB: 2x70W (HA) Eco Saver E27

POWER CORD: Transparent - Lenght 200 cm

CERTIFICATIONS AND SYMBOLS:

CE IP20 Intertek

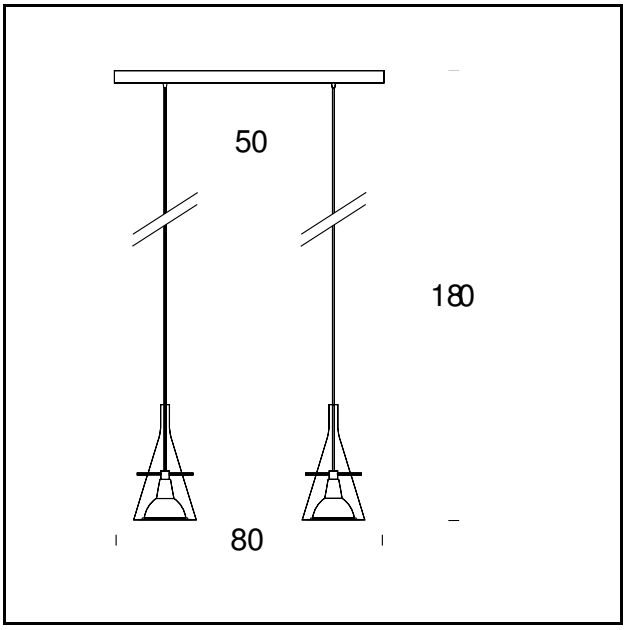

MODEL NAME: Flûte 2 Led

CODE: 4342/2

DIMENSIONS: Ø 18 - 80 + 180 cm

MATERIALS: Glass, metal

BULB: 2x10W Led Line Voltage (2700 K, CRI 80, 1250 Lm)

POWER CORD: Transparent - Lenght 200 cm

CERTIFICATIONS AND SYMBOLS:

CE IP20 Intertek

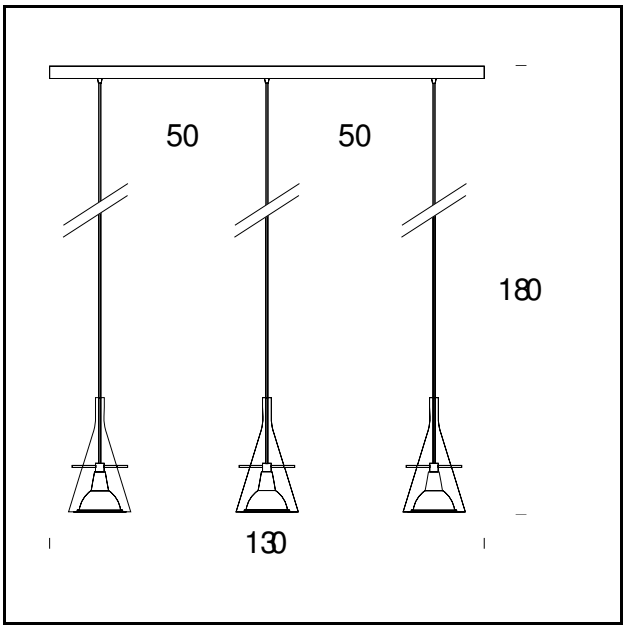

MODEL NAME: Flûte 3

CODE: 3337/3

DIMENSIONS: Ø 18 - 130 + 180 cm

MATERIALS: Glass, metal

BULB: 3x70W (HA) Eco Saver E27

POWER CORD: Transparent - Lenght 180 cm

CERTIFICATIONS AND SYMBOLS:

CE IP20 Intertek

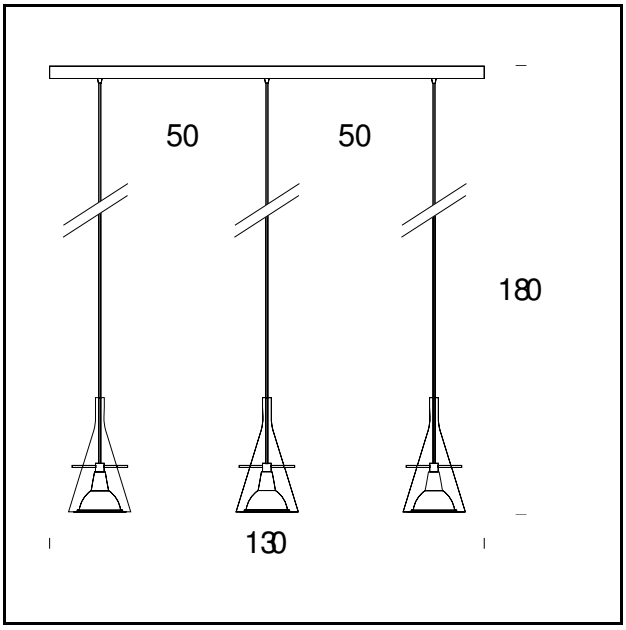

MODEL NAME: Flûte 3 Led

CODE: 4342/3

DIMENSIONS: Ø 18 - 130 + 180 cm

MATERIALS: Glass, metal

BULB: 3x10W Led Line Voltage (2700 K, CRI 80, 1250 Lm)

POWER CORD: Transparent - Lenght 200 cm

Subject to technical modifications and modifications to content